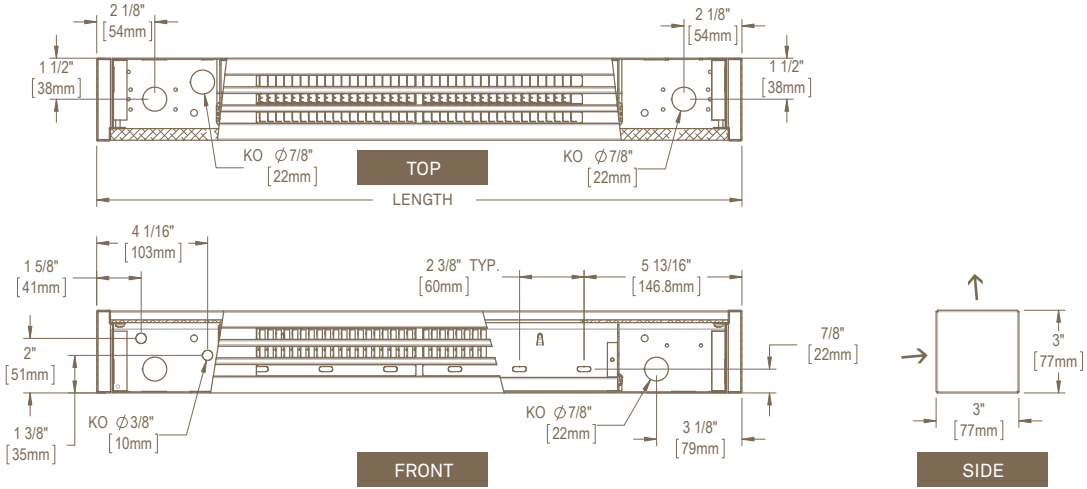TECHNICAL DRAWINGS